# SR20

## Spring-return damper actuator, 20 Nm



### Description

Damper actuator serie SR20 to operate and position air dampers in HVAC systems.

- For air dampers up to approx. 4 $m^2$
- Nominal voltage 24 Vac/dc and 230 Vac
- Control: 2-point, on-off and proportional
- Caracteristics: universal spindle clamp fo easy direct mounting, anti-rotation bracket provided for stability, selectable direction of rotation, adjustable angle of rotation, 1 m cable connection.

### Technical features

| Actuator model | | SR20A | SR20AM | SR20B |
|---|---|---|---|---|
| **Damper area** | $m^2$ | | 4 | |
| **Nominal torque** | Nm | | 20 | |
| **Power supply** | V | 24 AC/DC | 24 AC/DC | 240 AC |
| **Frequency** | Hz | | 50/60 | |
| **Power consumption** | | | | |
| **- in operation** | W | 6,5 | 6,5 | 7,0 |
| **- at rest** | W | | 3,0 | |
| **- for wire sizing** | VA | | 10,0 | |
| **Running time for motor** | s | | <180 | |
| **Running time for spring** | s | | <30 (spring reset) | |
| **Sound power level** | db (A) | | 50 (motor), 62 (spring) | |
| **Control signal** | | 2 point, on-off | 0(2)...10 V DC / 0(4)...20 mA | 2 point, on-off |
| **Auxilary switch rating** | | | 3 (1,5) A, AC 250 V | |
| **Life Cycle** | cicli | | 70.000 | |
| **Rotation angle** | | | | |
| **- operating** | | | 0-90° | |
| **- limitation** | | | 5-85° (steps of 5°) | |
| **Protection class** | | III | III | II |
| **Protection degree** | | | IP54 | |
| **Working range °C** | | | -20...+50° C | |
| **Working range RH** | | | 5...95% RH, non-condensating | |
| **Storage temperature** | | | -40...+70° C | |
| **Manual override** | | | by means of hand crank and locking switch (only ON-OFF models) | |
| **Maintenance** | | | free | |
| **Shaft length** | mm | | > 90 | |
| **Shaft diameter** | mm | | ○ 10...21 □ 8x8...15x15 | |
| **Weight** | g | | 2700 | |
| **Standards** | | | CE-conformity, RoHs | |
| **Option** | | | suffix S for models with 2 SPDT auxiliary switches | |

Eatec srl - Loc. Förche 20 - I-39040 Naz/Sciaves (BZ) - Tel. +39 0472 055617 - Fax +39 0472 089807 - info@eatec.it - www.eatec.it

## Electrical wirings

Wiring diagram, On-Off

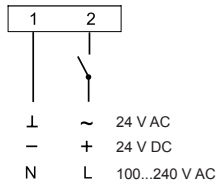


Wiring diagram, Proportional

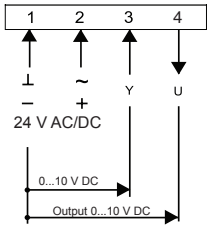


Auxiliary switches

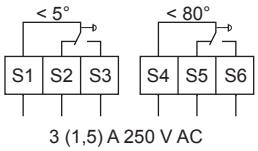


## Settings

Limitation of rotation angle from 5° to 85°

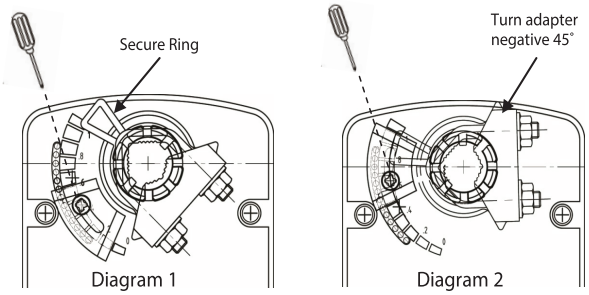


For 5° to 45° (diagram 1)
1. Loosen screw of the mechanical limiter plate.
2. Move the limiter plate to the appropriate position.
3. Tighten the screw.

For 45° to 85° (diagram 2)
1. Release the secure ring of the adapter.
2. Remove the adapter and turn negative 45° as shown.
3. Insert adapter and secure the adapter ring.
4. Loosen screw of the mechanical limiter plate.
5. Move the limiter plate to the appropriate position.
6. Tighten the screw.

**Manual ovverride:** By using the hand crank the damper ca be actuated manually and engaged with the locking switch at any position. Unlocking is carried out manually or automatically by applying the operating voltage.

## Dimensions (mm)




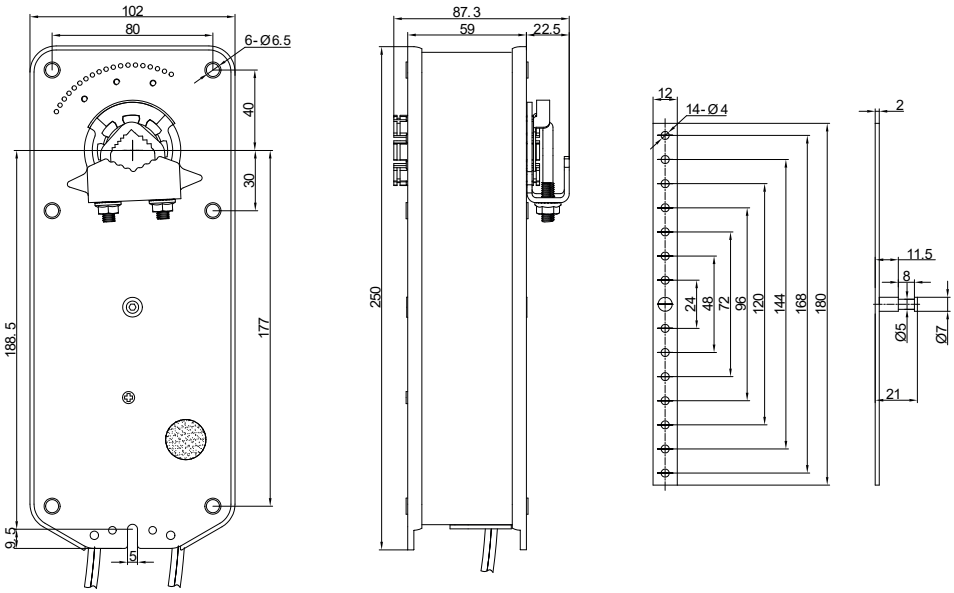




Use the dedicated key supplied for manual lock-unlock operation. Do not use a screwdriver.

The contents are subject to revision or change without notice.