SR15

Spring-return damper actuator, 15 Nm



Description

Damper actuator serie SR15 to operate and position air dampers in HVAC systems.

- For air dampers up to approx. 3 m^2
- Nominal voltage 24 Vac/dc and 230 Vac
- Control: 2-point, on-off and proportional
- Caracteristics: universal spindle clamp fo easy direct mounting, anti-rotation bracket provided for stability, selectable direction of rotation, adjustable angle of rotation, 1 m cable connection.

Technical features

Actuator model		SR15A	SR15AM	SR15B
Damper area	m^2		3	
Nominal torque	Nm		15	
Power supply	V	24 AC/DC	24 AC/DC	240 AC
Frequency	Hz		50/60	
Power consumption				
- in operation	W	6,5	6,5	7,0
- at rest	W		3,0	
- for wire sizing	VA		10,0	
Running time for motor	s	<150	<120	<150
Running time for spring	s		25 (spring reset)	
Sound power level	db (A)		50 (motor), 62 (spring)	
Control signal		2 point, on-off	0(2)...10 VDC / 0(4)...20 mA	2 point, on-off
Auxilary switch rating			3 (1,5) A, AC 250 V	
Life Cycle	cicli		70.000	
Rotation angle				
- operating			0-90°	
- limitation			5-85° (steps of 5°)	
Protection class		III	III	II
Protection degree			IP54	
Working range °C			-20...+50° C	
Working range RH			5...95% RH, non-condensating	
Storage temperature			-40...+70° C	
Manual override			by means of hand crank and locking switch (only ON-OFF models)	
Maintenance			free	
Shaft length	mm		> 90	
Shaft diameter	mm		○ 10...21 □ 8x8...15x15	
Weight	g	2600	3000	2600
Standards			CE-conformity, RoHs	
Option			suffix S for models with 2 SPDT auxiliary switches	

Eatec srl - Loc. Förche 20 - I-39040 Naz/Sciaves (BZ) - Tel. +39 0472 055617 - Fax +39 0472 089807 - info@eatec.it - www.eatec.it

SR15

Electrical wirings

Wiring diagram, On-Off

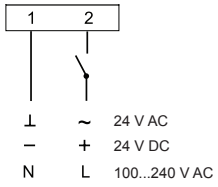

Wiring diagram, Proportional

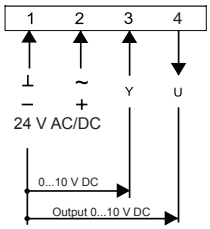

Auxiliary switches

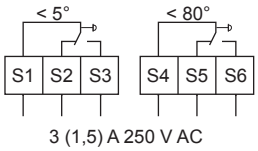

Settings

Limitation of rotation angle from 5° to 85°

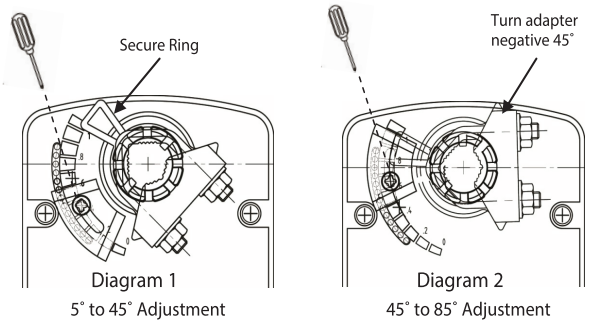

For 5° to 45° (diagram 1)
1. Loosen screw of the mechanical limiter plate.
2. Move the limiter plate to the appropriate position.
3. Tighten the screw.

For 45° to 85° (diagram 2)
1. Release the secure ring of the adapter.
2. Remove the adapter and turn negative 45° as shown.
3. Insert adapter and secure the adapter ring.
4. Loosen screw of the mechanical limiter plate.
5. Move the limiter plate to the appropriate position.
6. Tighten the screw.

Manual ovverride: By using the hand crank the damper ca be actuated manually and engaged with the locking switch at any position. Unlocking is carried out manually or automatically by applying the operating voltage.

Dimensions (mm)

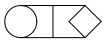



Use the dedicated key supplied for manual lock-unlock operation. Do not use a screwdriver.

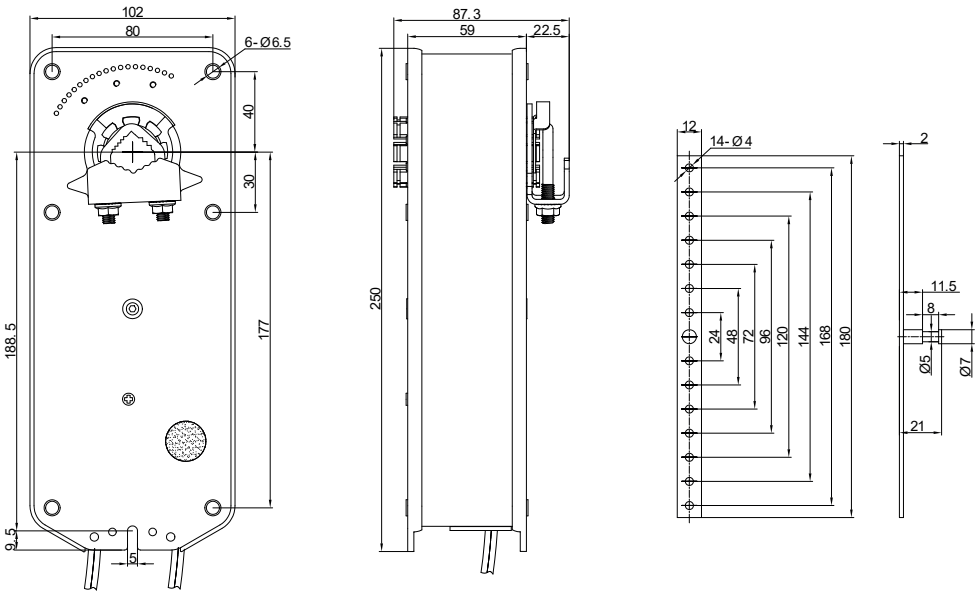

The contents are subject to revision or change without notice.

Eatec srl - Loc. Förche 20 - I-39040 Naz/Sciaves (BZ) - Tel. +39 0472 055617 - Fax +39 0472 089807 - info@eatec.it - www.eatec.it