Damper actuators, 8 Nm

S8

Description

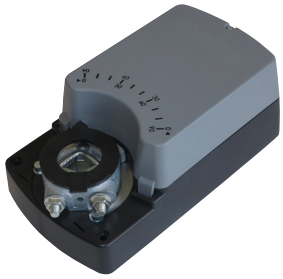

Damper actuator serie S8 to operate and position air dampers in HVAC systems.

- For air dampers up to approx. 1,5 m^2
- Nominal voltage 24 Vac/dc and 100...240 Vac
- Control: Open-close or 3-point and proportional
- Caracteristics: universal spindle clamp fo easy direct mounting, shaft dimensions Ø 10 to 20 mm round / 10 to 16 mm square, minimum shaft length 50 mm, anti-rotation bracket provided for stability, manual over ride by push button, selectable direction of rotation, adjustable angle of rotation, parallel connection up to 10 actuators, manual override with push-button possible (the gear train is disengaged for as long as the button is pressed), the actuator is overload protected, requires no limit switches and automatically stops when the end is reached.

Technical features

Actuator model		S8A	S8B	S8AM	S8BM
Damper area	m^2	1,5			
Nominal torque	Nm	8			
Power supply	V	24 AC/DC	100...240 AC	24 AC/DC	100...240 AC
Frequency	Hz	50/60			
Power consumption					
- in operation	W	4.5			
- at rest	W	0.5	0.7	0.5	0.7
- for wire sizing	VA	7.0			
Running time	s	30...60			
Sound power level	max. db (A)	45			
Control signal		2-3 point	2-3 point	0(2)...10 V DC 0(4)...20 mA	0(2)...10 V DC 0(4)...20 mA
Auxiliary switch rating		3 (1.5) A, 230 V AC			
Life Cycle	cicli	60.000			
Rotation angle					
- operating		0-90°			
- limitation		5-85° (steps of 5°)			
Protection class		III	II	III	II
Protection degree		IP54			
Working range °C		-20...+70° C			
Working range RH		5...95% RH, non-condensating			
Storage temperature		-40...+80° C			
Maintenance		free			
Weight	g	<1300			
Standards		CE-conformity, RoHs			
Option		suffix S for models with 2 SPDT auxiliary switches			

Electrical wirings for models at 2 / 3 points

Wiring diagram

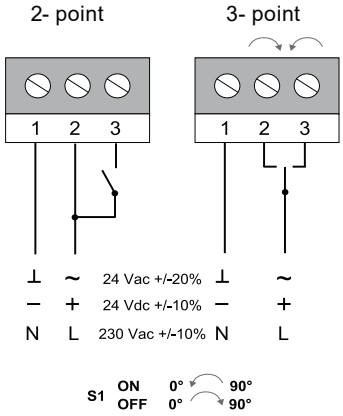

Auxiliary switches

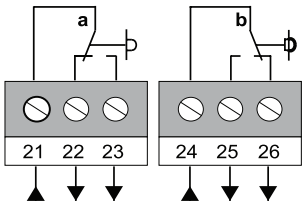

3 (1,5) A 230 Vac

actuator in position 0°

Parallel connections

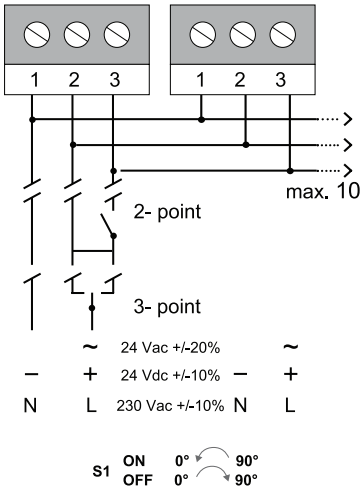

Electrical wirings for proportional models

Wiring diagram 230 V AC

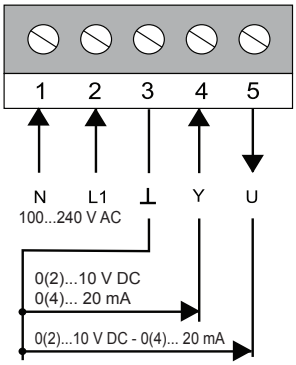

Wiring diagram 24 V AC

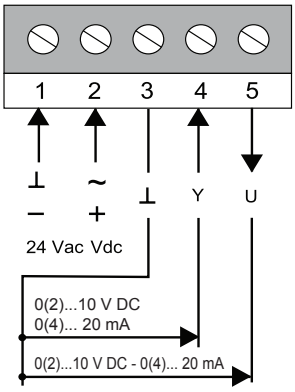

Auxiliary switches

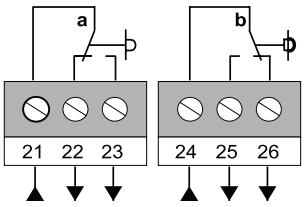

3 (1,5) A 230 Vac

actuator in position 0°

Settings DIP switches

DIP 1
Feedback signal



OFF: 0(2)...10 V
ON: 0(4)...20 mA

DIP 2
Input signal starting point



OFF: 0...10 V o 0...20 mA
ON: 2...10 V o 4...20 mA

DIP 3
Input signal



OFF: 0(2)...10 V
ON: 0(4)...20 mA

DIP 4
Rotation direction

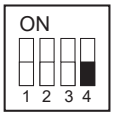

option

S2
Rotation direction



OFF: With the increase of the signal, the actuator rotate couterclockwise
ON: With the increase of the signal, the actuator rotate clockwise

Auxiliary switch adjustment

Factory setting:
switch a at 10°
switch b at 80°
The switching position can be changed manually.

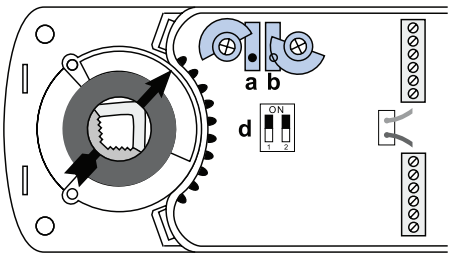

Angle of rotation limiting

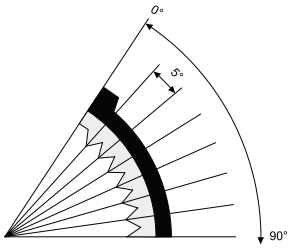

Adapter release

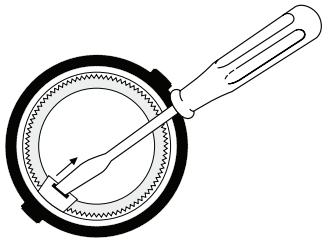

Dimensions (mm)

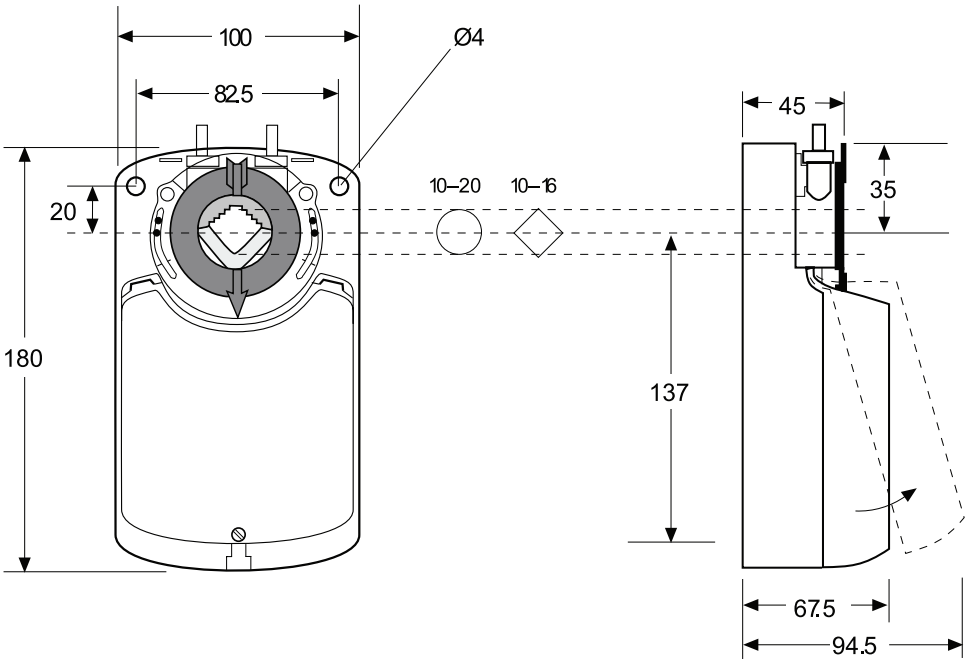

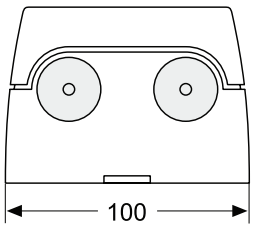

The contents are subject to revision or change without notice.