Ball valves

VS

Description

The ball valves VS serie are control valves with perfect sealing, that thanks to the shaping of the adjustment disk guarantees a percentage flow characteristic.

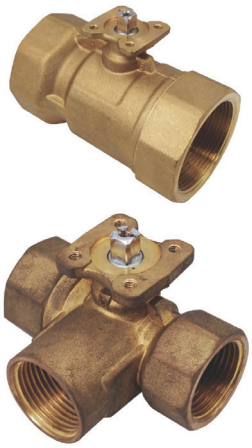

Technical specifications

Valve type	BSP 2 way, 3 way mixing / diverting
Fluid	Hot and cold water (with glycole max. 50%) and 15% (103 kPa) saturated steam
Fluid temperature	-5...+120°C at an ambient temperature of 40°C
Nominal pressure	PN20
Leakage	0.01% of maximum flow per ANSI/FCI 70-2 Class IV Three-way bypass port leakage: 1% of maximum flow High tight shut-off
Control flow characteristics	Equal-percentage A-C, linear for port B bypass
Max. closing pressure	13 bar
Max. diff. pressure (close-off)	See table below
Maintenance	Free
Valve	Forged brass (from DN15 to DN50), cast iron (DN65 and DN80)
Plug	Stainless steel V2A
Stem	Brass
Seat	EPDM
Seal	HNVR double O-ring
Standards	CE-conformity, RoHS

Models 2-way	Models 3-way	DN	KVs	Actuator type	Actuator type with spring return(*)
VS215	**VS315**	15	4.0	SV2 / SV5	SR5
VS220	**VS320**	20	6.3	SV2 / SV5	SR5
VS225	**VS325**	25	10	SV5	SR5
VS232	**VS332**	32	16	SV5	SR10
VS240	**VS340**	40	25	SV10	SR10
VS250	**VS350**	50	40	SV10	SR15
VS250B	**VS350B**	50	63	SV10	SR15
VS265	-	65	63	SV20	SR15
VS280	-	80	100	SV20	SR15
VS2100	-	100	120	SV40	-

(*) For coupling valve and spring return actuator adapter VSAR is required

Control flow characteristics

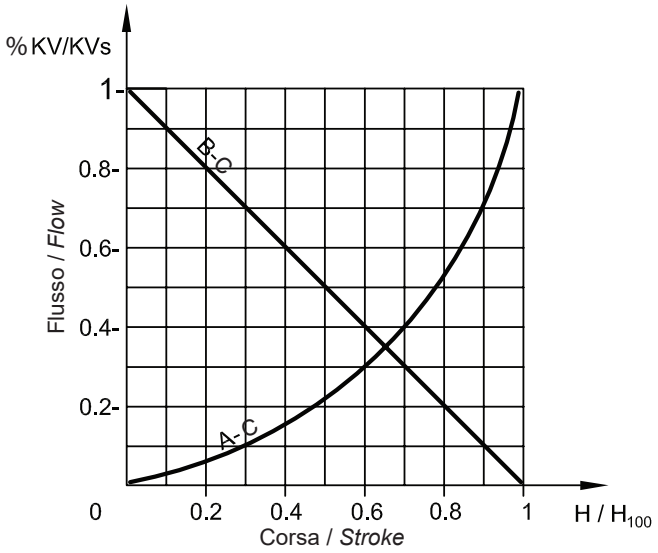

A-C equal-percentage way
B-C bypass lineare way
3-way used as mixing inlet in A and B, outlet C
3-way used as diverting inlet in A, outlet from B or C

C way	constant flow
A way	variable flow
B (bypass) way	variable flow

Installation

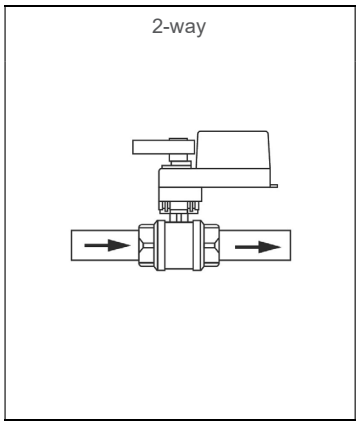

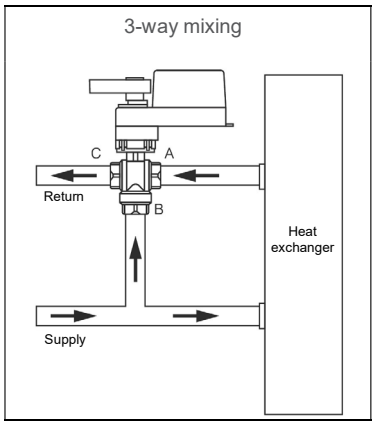

Mixing application:
Fluid enters through two inlets (A & B) and exits through one outlet (C).

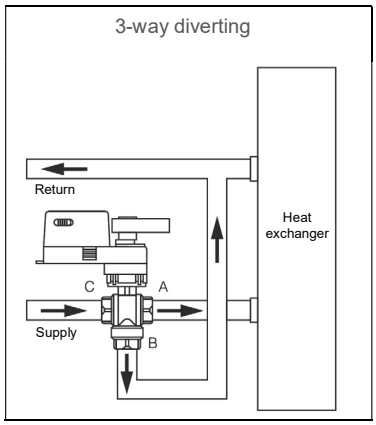

Diverting application:
Fluid enters through one inlet (C) and exits through two outlets (A & B).

Dimensions with actuator S4...S32 (mm)

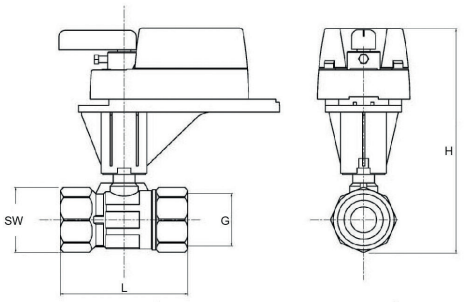

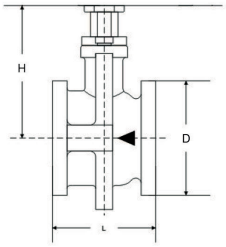

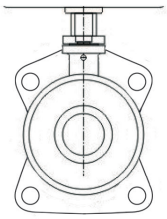

VS265

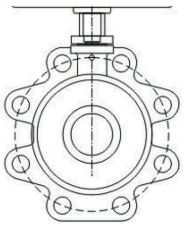

VS280

DN mm	G	L	H	SW	D	Flange	Weight 2 way (kg)	Weight 3 way (kg)
15	G 1/2	60	179,20	26	-	-	0,2	0,25
20	G 3/4	67	187,80	32	-	-	0,35	0,4
25	G 1”	89	193,80	39	-	-	0,55	0,7
32	G 1” 1/4	99	204	48	-	-	0,85	1,1
40	G 1” 1/2	106	212,80	56	-	-	1,2	1,4
50	G 2”	128	224,70	70	-	-	1,95	2,2
65	Flange 145	97	136	-	105	4-18	4,5	-
80	Flange 160	108	140	-	125	8-18	6,8	-
100	Flange 180	120	202	-	125	8-18	8,6	-

Dimensions with actuator S5..V and S..10V (mm)

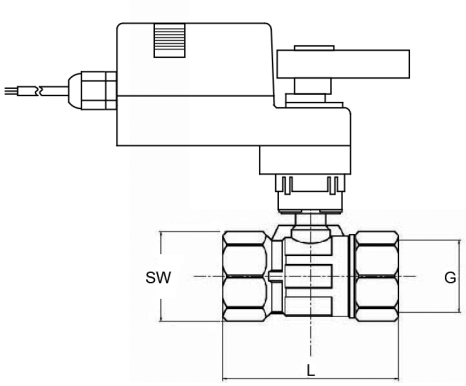

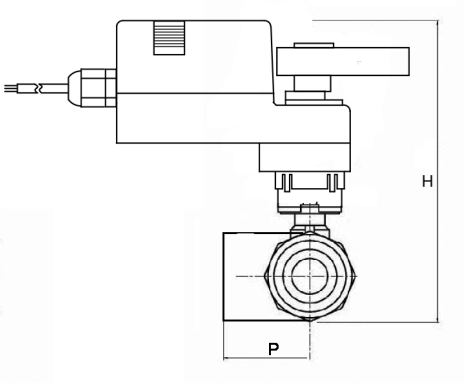

DN mm	G	L	H	SW	P	Weight 2 way (kg)	Weight 3 way (kg)
15	G 1/2	60	137	26	31	0,2	0,25
20	G 3/4	67	142	32	32	0,35	0,4
25	G 1”	89	148	39	46	0,55	0,7
32	G 1” 1/4	99	159	48	49	0,85	1,1
40	G 1” 1/2	106	181,60	56	52	1,2	1,4
50	G 2”	128	192.70	70	69	1,95	2,2
65	Flange 145	97	136	-		4,5	-
80	Flange 160	108	140	-		6,8	-
100	Flange 180	120	202	-		8,6	-

The contents are subject to revision or change without notice.